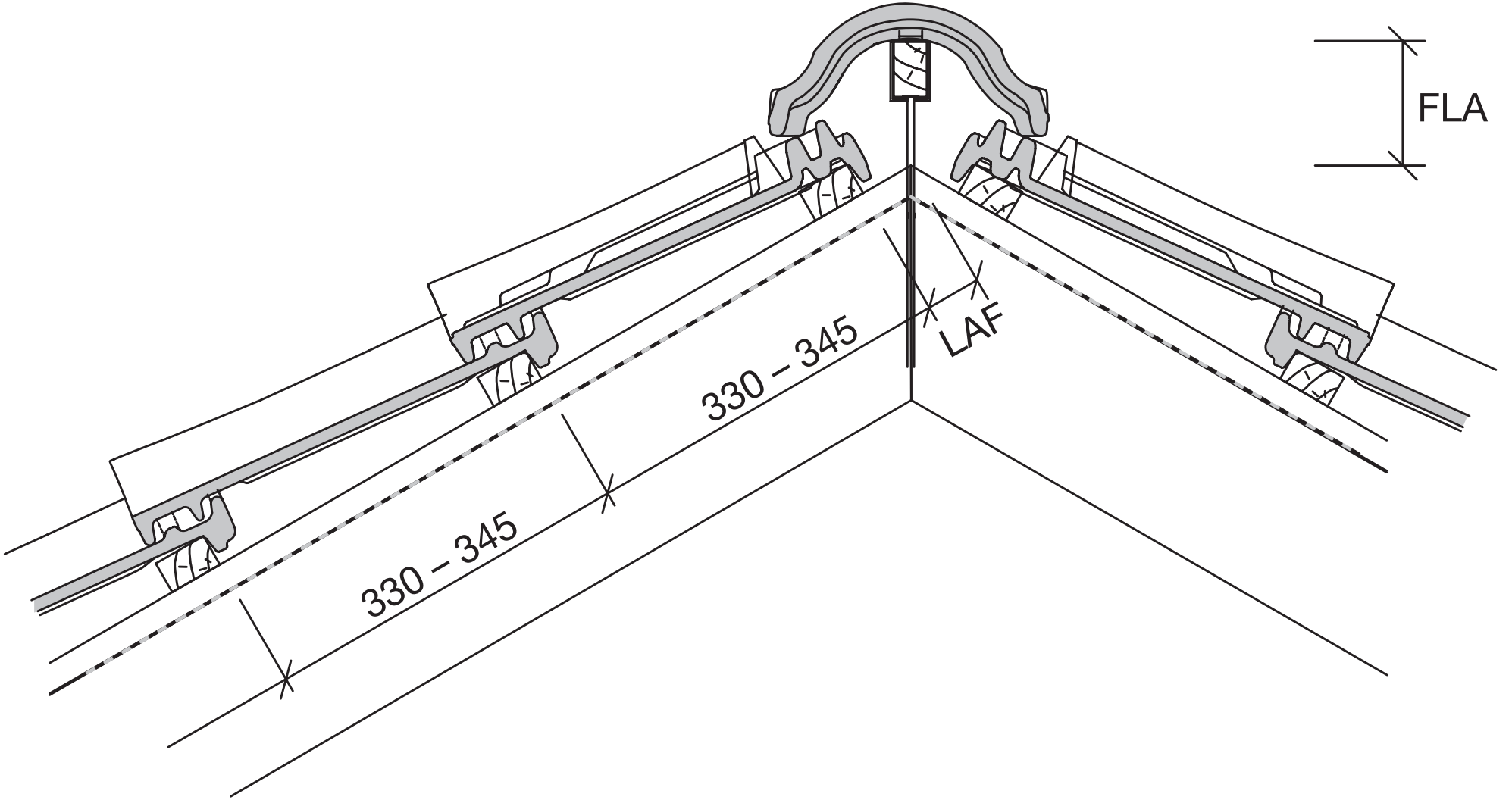
FLA
LAF
330 – 345
330 – 345