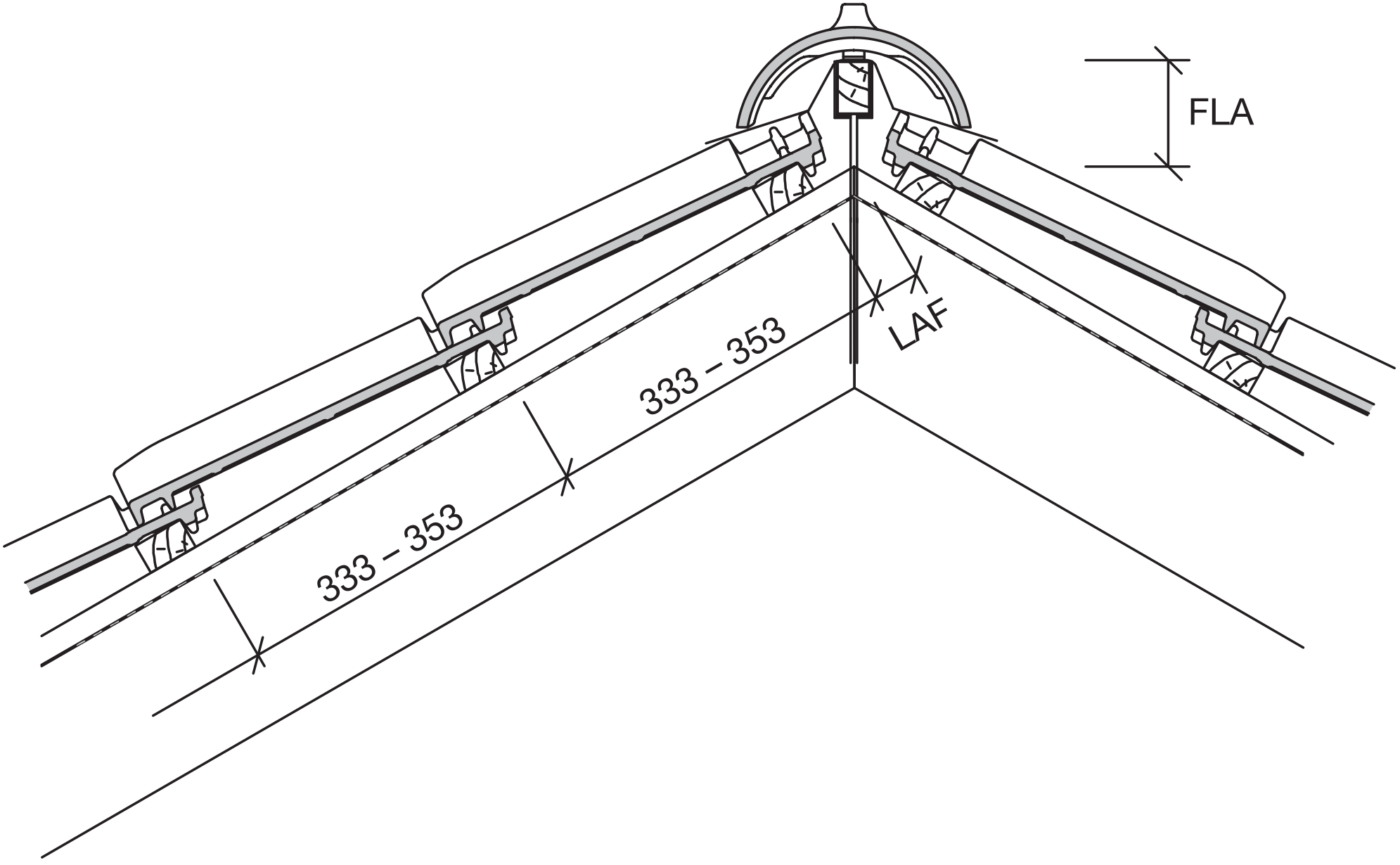
FLA
LAF
333 – 353
333 – 353