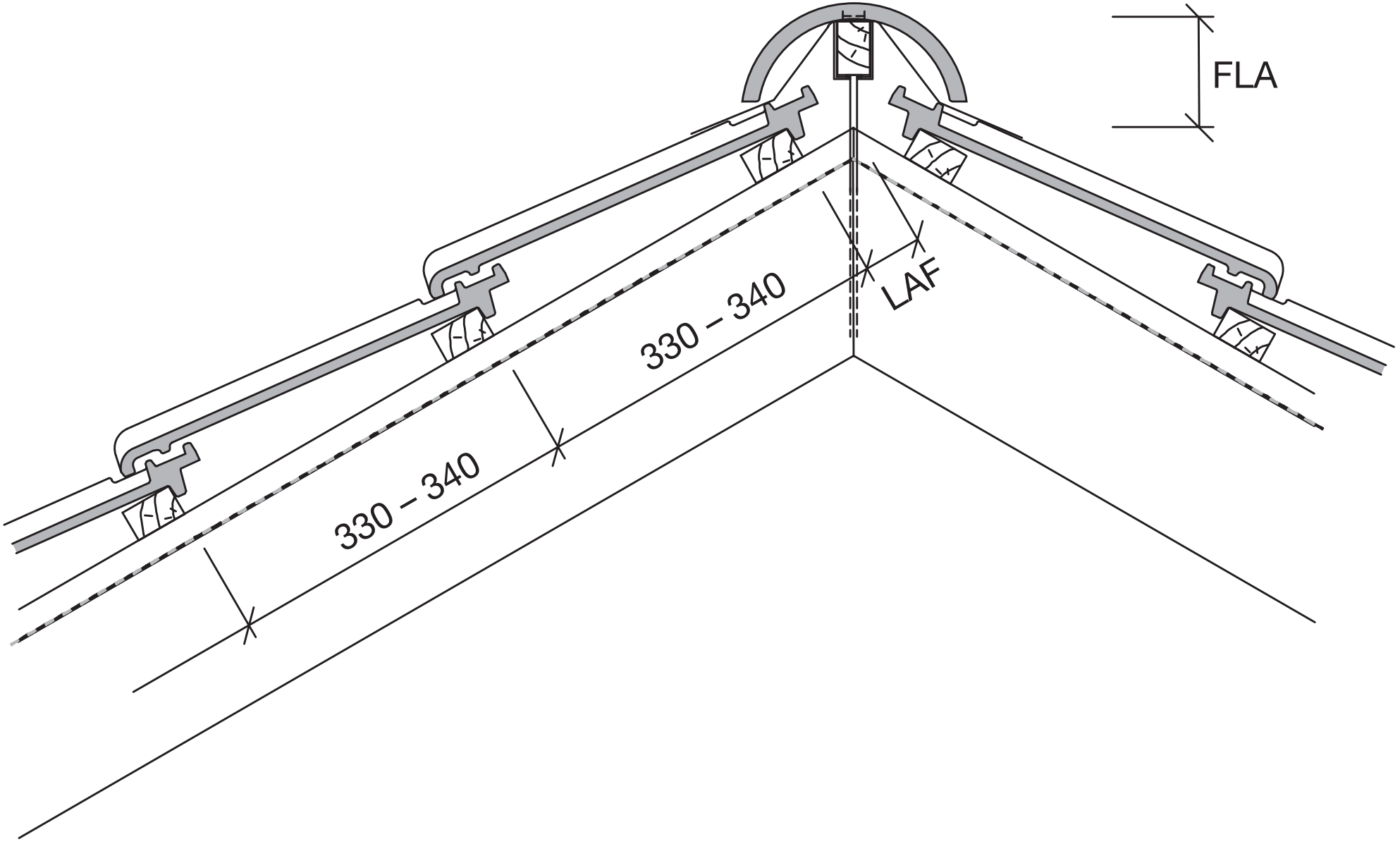
FLA
LAF
330 – 340
330 – 340