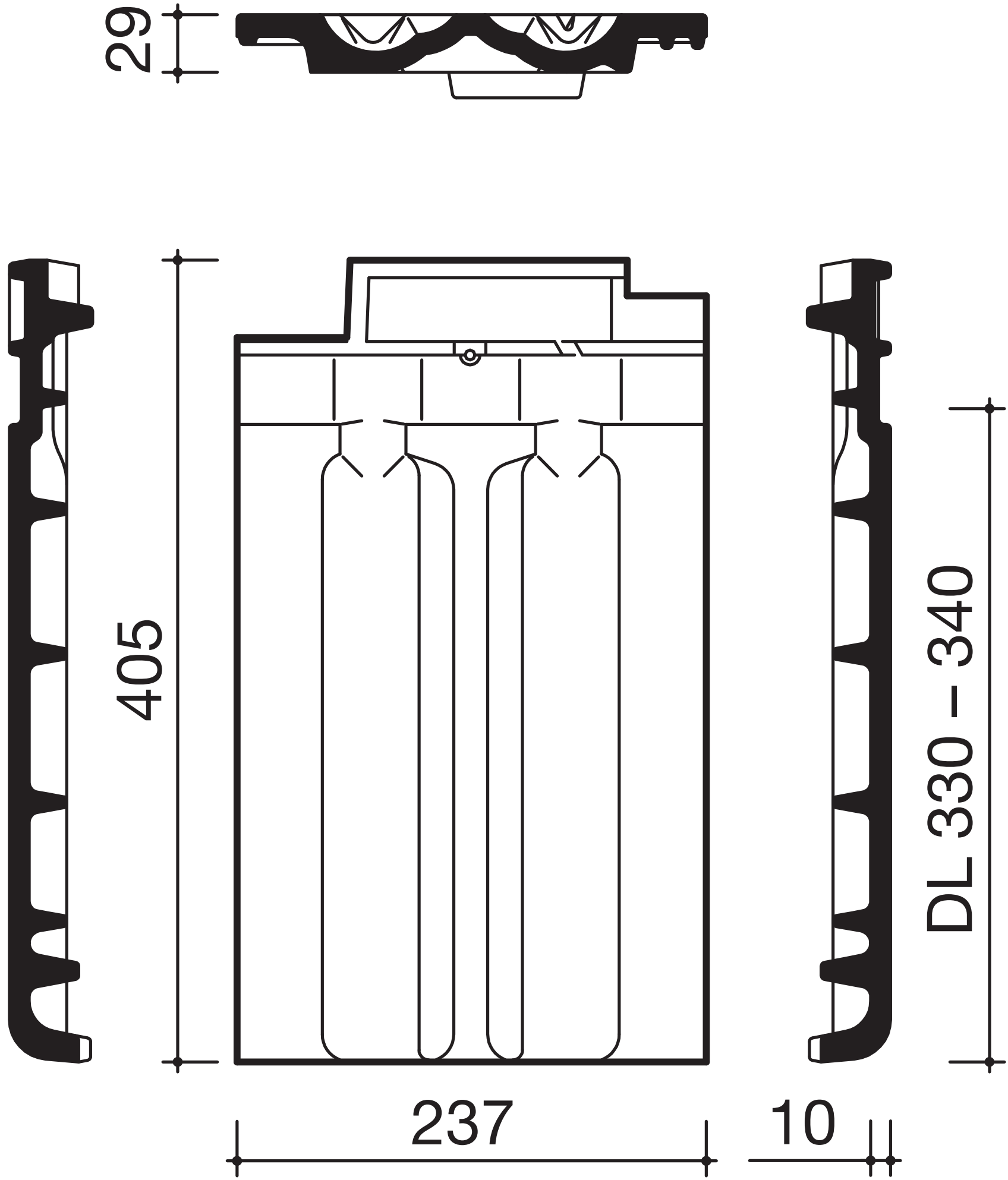
29
405
DL 330 – 340
237
10