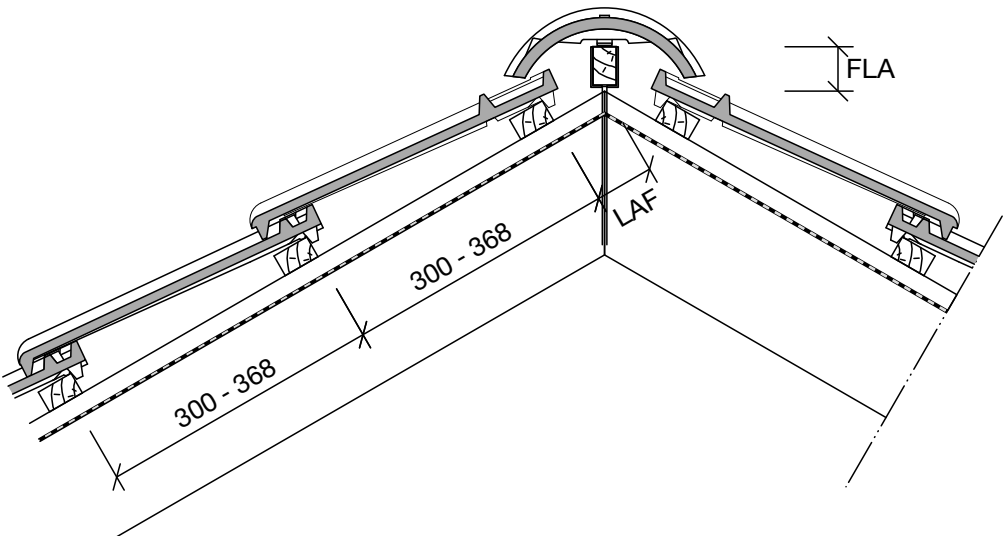
FLA
LAF
300 - 368
300 - 368