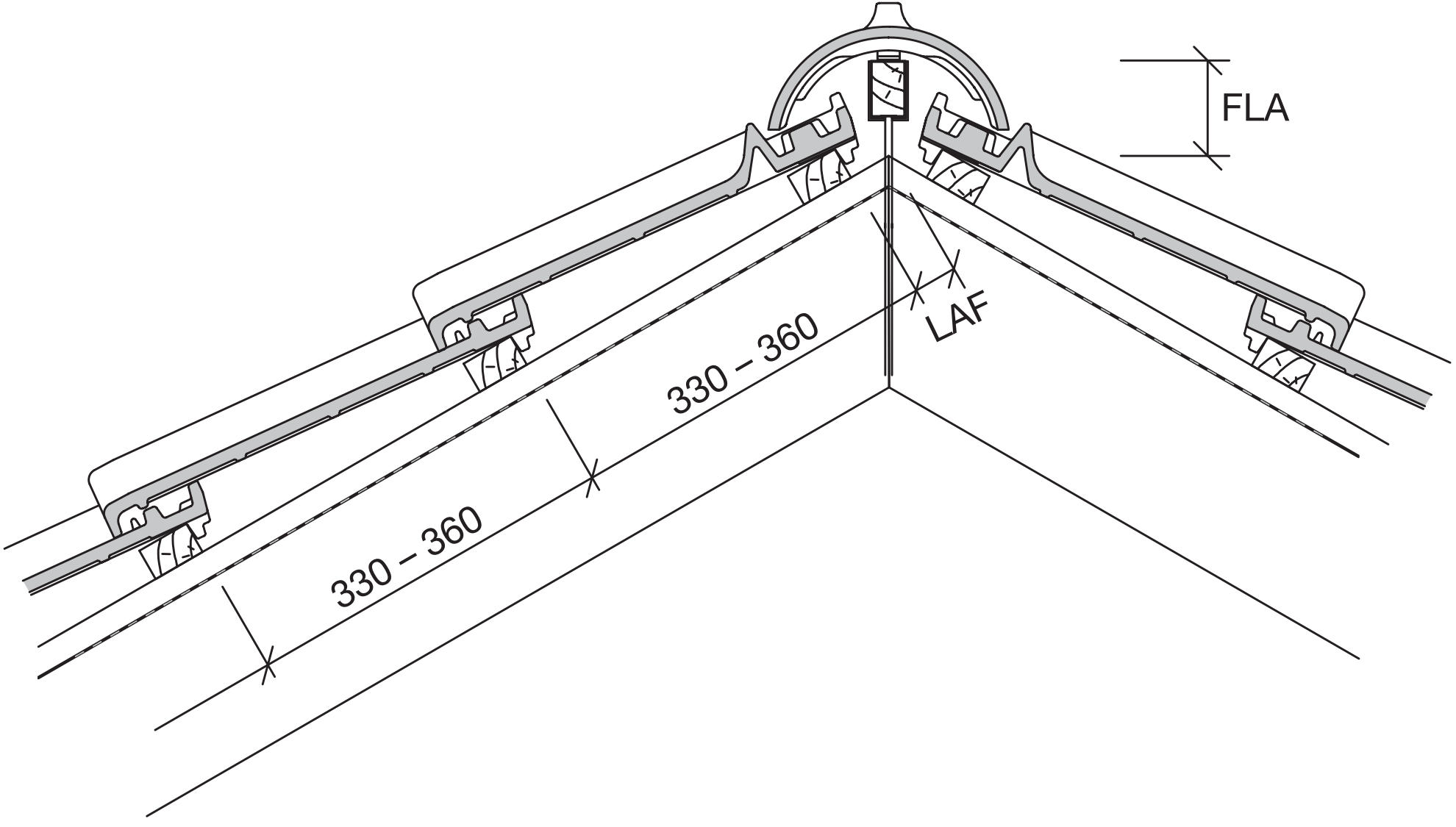
FLA
LAF
330 – 360
330 – 360