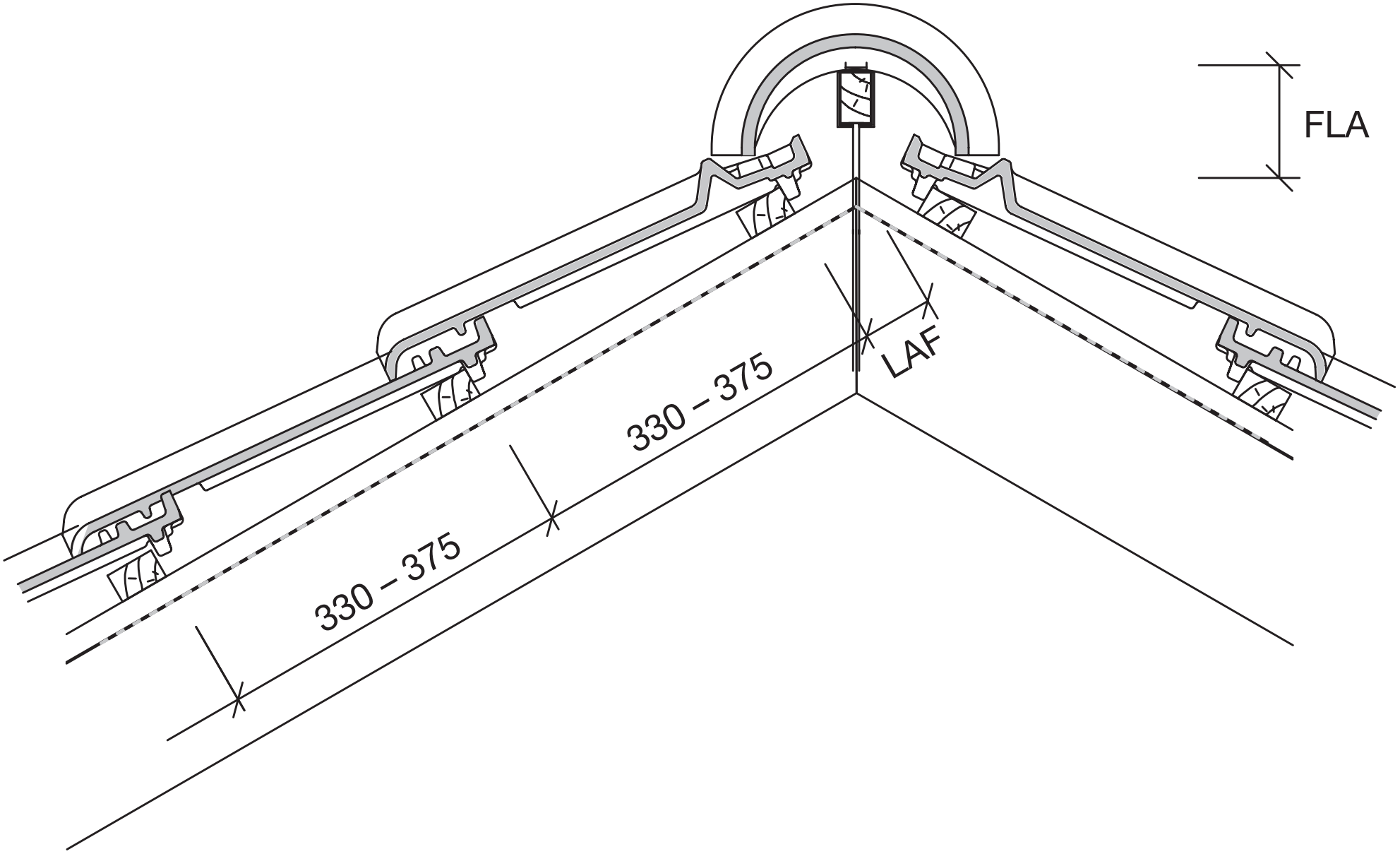
FLA
LAF
330 – 375
330 – 375